# PAGING HORN SPEAKER 30W (WITH TRANSFORMER)

SC-630M

## ■DESCRIPTION

The SC-630M is a compact, highly intelligible speaker suited to public address announcement applications. Its external speaker component finished with powder coating, and stainless steel bracket and screws ensure the unit's weatherproof capability.

## ■SPECIFICATIONS

| | |
|---|---|
| Rated Input | 30 W |
| Line Voltage | 100 V line or 70 V line |
| Rated Impedance | 100 V line: 330 Ω (30 W), 670Ω (15 W), 1 kΩ (10 W), 2 kΩ (5 W)<br>70 V line: 170 Ω (30 W), 330 Ω (15 W), 670 Ω (7.5 W),<br>1 kΩ (5 W), 2 kΩ (2.5 W) |
| Sound Pressure Level | 113 dB (1 W, 1 m at 500 Hz to 2.5 kHz peak level) |
| Frequency Response | 250 Hz – 10 kHz |
| Dust/Water Protection | IP65 |
| Polarity | Hot: Black, Com: White |
| Operating Temperature | −20 ℃ to +55 ℃ (must be free from dew condensation) |
| Finish | Horn flare: Aluminum, off-white, powder coating<br>Reflector horn and rear cover: ABS resin, off-white<br>Bracket, screws and bolts: Stainless steel<br>Speaker cable: Polyvinyl chloride insulated cabtyre cable<br>(6 mm in diameter, 600 mm in length) |
| Dimensions | 285 (W) × 227 (H) × 277 (D) mm |
| Weight | 2 kg |
| Option | Swivel bracket: YS-151S (Can be used instead of the supplied bracket.) |

Note: Avoid installing the speaker in locations which vibrate considerably, or under environments easy to be oil-contaminated.

## ■APPEARANCE

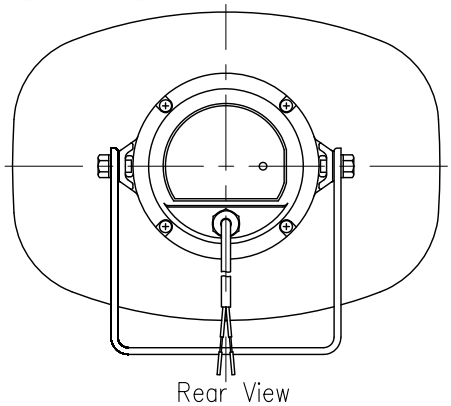

Rear View

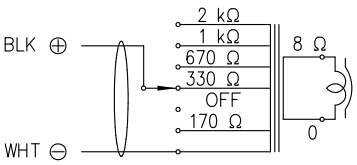


(Transformer connection when the speaker is supplied from the factory)

Wiring diagram

CAUTION
NEVER SET THE SWITCH TO "▭" POSITION FOR 100 V LINE OPERATION, AS DOING SO MAY RESULT IN DAMAGE TO THE SPEAKER.

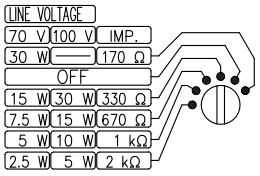


Set the impedance selector to the desired impedance.

Impedance selection

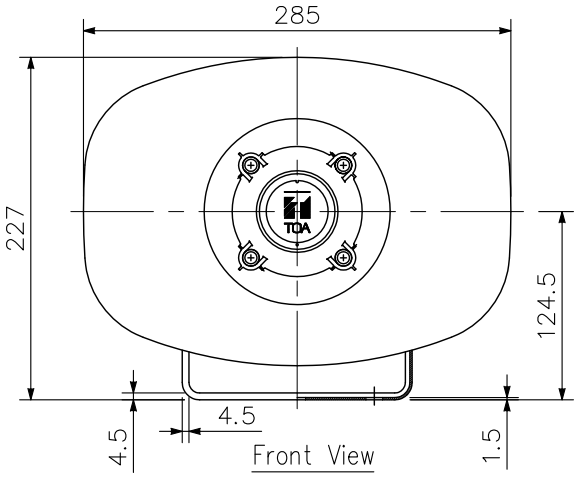


Front View

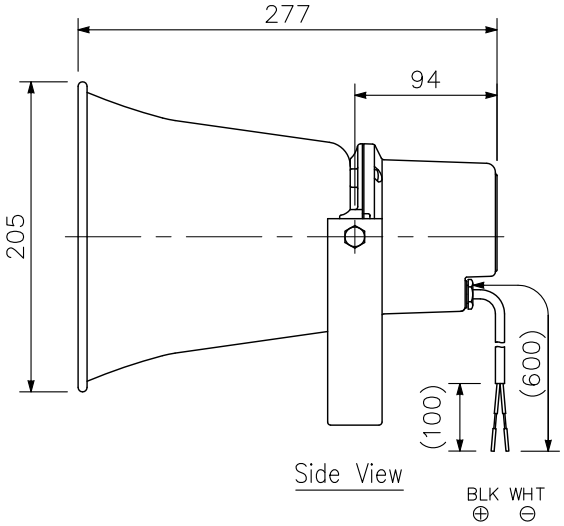


Side View

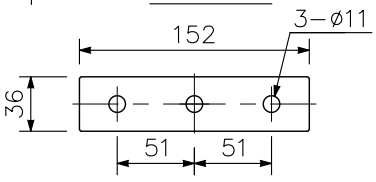


Bracket dimensional diagram

UNIT: mm SCALE: 1/5

Note: Numerical values in parentheses are for reference only.